KRÜGER

CAC Series

CENTRIFUGAL ANTI-CORROSIVE FANS

CENTRIFUGAL ANTI-CORROSIVE FANS – **CAC Series**

- ***CAC Series** are anti-corrosive polypropylene direct drive single inlet centrifugal fans.*
- *Suitable for many special applications where the extraction of a corrosive atmosphere is required.*
- *Applications include industrial chemical fumes, petrochemical fumes, laboratories and gases up to 40°C.*
- *All models incorporate radical centrifugal impellers manufactured from tough polypropylene.*
- *Models 160 to 315 are provided with a robust sheet metal mounting frame to support the motor and facilitate installation*
- *Radial centrifugal impellers are manufactured from tough polypropylene.*
- *Motors use are asynchronous induction motors with squirrel cage rotor in die cast aluminum.*

Dimension

CAC 140

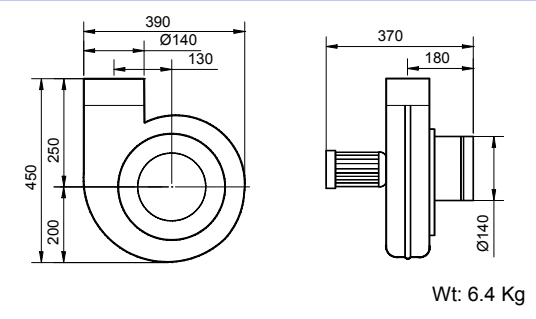

CAC 160~250

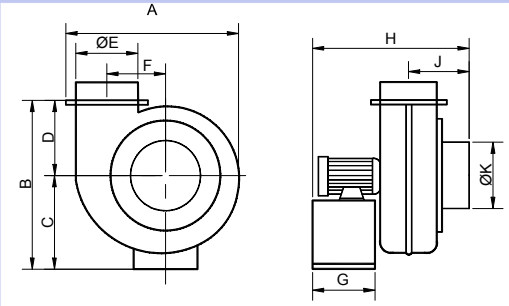

TYPE	A	B	C	D	ØE	F	G	H	J	ØK	Wt (kg)
CAC 160	425	450	250	200	160	135	150	440	160	160	10.8
CAC 200	590	570	310	260	200	250	220	530	200	200	17.6
CAC 250	790	760	420	340	250	290	260	660	240	250	35.2

CAC 315

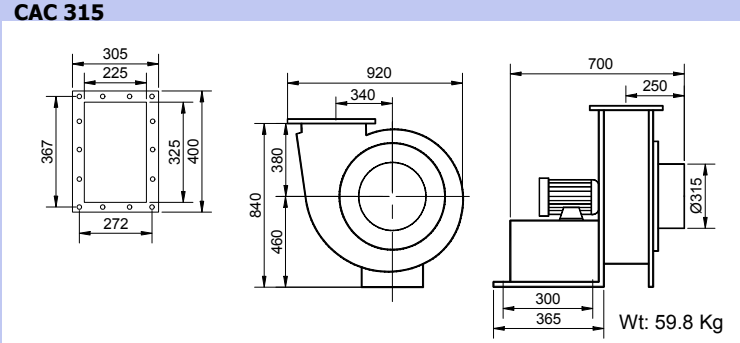

All Dimension in mm.

Technical Data

Model	Max Q m³/h	Power W	Motor Protection	Motor	N° Pole	Hz	Abs. Current 230/400V (A)	Insulation Class	dB (A) at 3m	RPM
CAC 140-2	615	90	IP55	3 Phase	2	50	0.7 / 0.4	F	54	2750
CAC 160-2	1150	370	IP55	3 Phase	2	50	1.9 / 1.1	F	63	2820
CAC 200-2	3500	1500	IP55	3 Phase	2	50	6.1 / 3.5	F	75	2870
CAC 160-4	830	250	IP55	3 Phase	4	50	1.04 / 0.6	F	48	1360
CAC 200-4	1850	370	IP55	3 Phase	4	50	1.82 / 1.05	F	60	1370
CAC 250-4	3650	1500	IP55	3 Phase	4	50	3.5 (400V)	F	63	1420
CAC 315-4	5800	2200	IP55	3 Phase	4	50	4.9 (400V)	F	71	1430

** dB(A) at 3m measured at free discharge.*

Performance

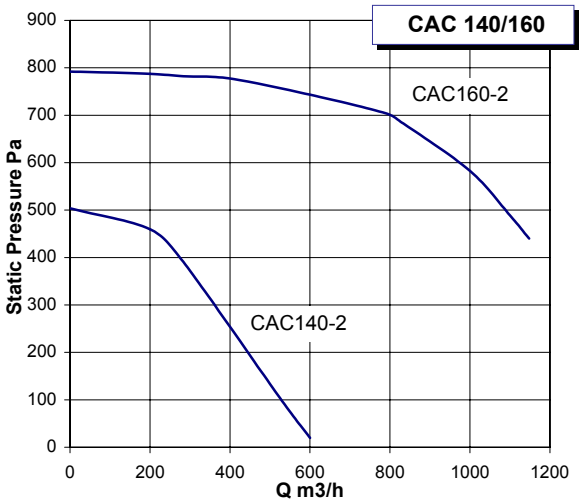

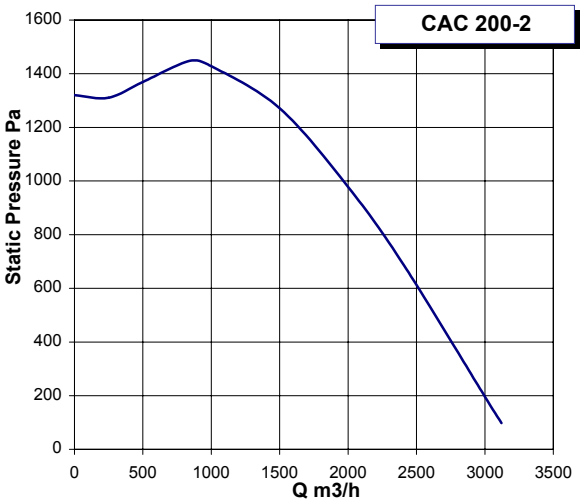

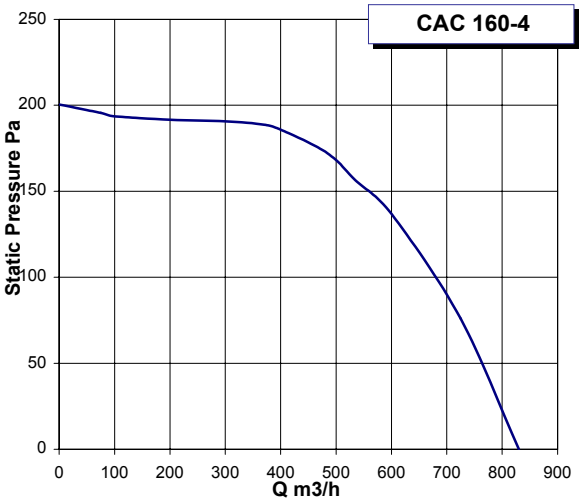

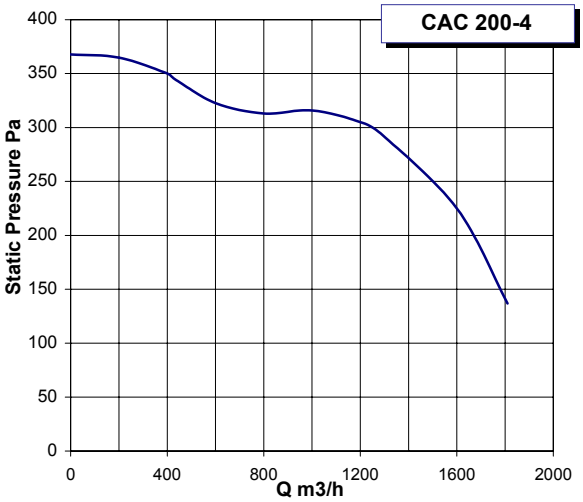

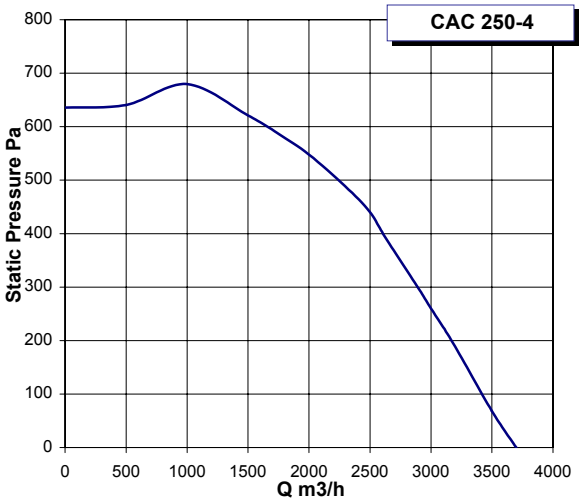

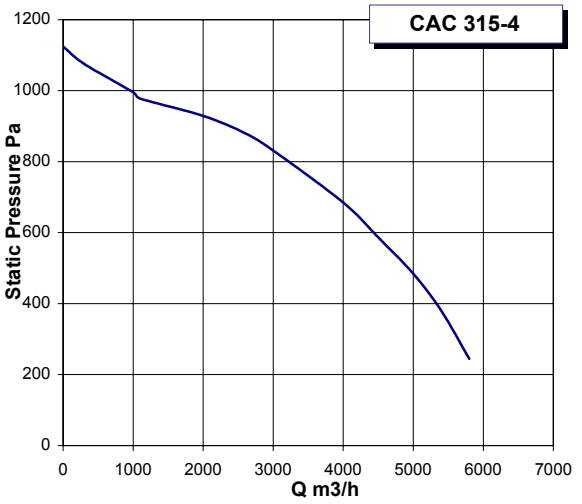

The company is always improving & developing its products, therefore the company reserve the right to make changes to the illustrated products. Certified dimension will be provided upon request.